LUW80043

Features:

- Waterclear 8mm lens packege
- High speed response.
- High reliability and long life.
- Low power consumption.
- Suitable for pulse operation.
- This product doesn't contain restriction Substance, comply ROHS standard.

Descriptions:

- The LED lamps are available with different colors,intensities,epoxy colors,etc.
- The series specially designed for applications requiring higher brightness.
- Superior performance in outdoor environment.

Applications:

- These lamp are widely used for various application.
- Board for display.
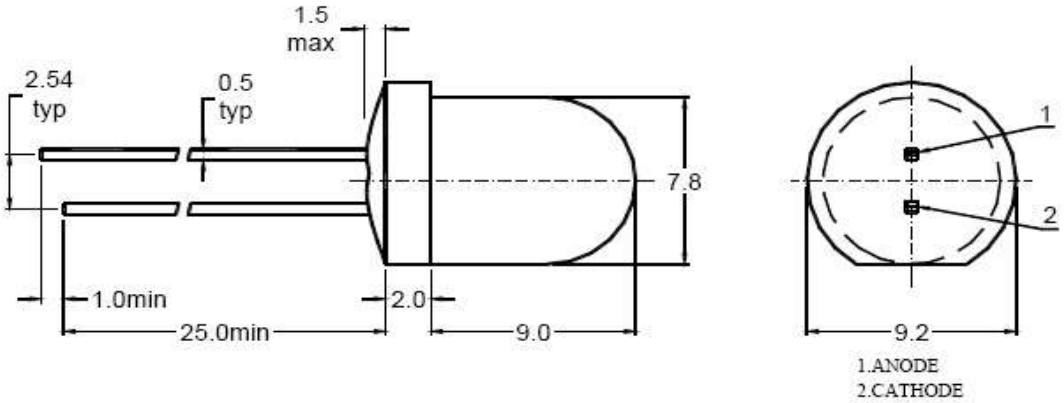
Part No.	Color	Wavelength	Luminous Intensity	Forward Current	Forward Voltage	Operating Temperature Range	Half Viewing Angle
		λd	**mcd**	**mA**	**If=150mA**		**2 θ1/2**
LUW80043	White		5000 – 7000	20	3.1 - 3.6	-30℃ to +85℃	30 deg