# OPRAWA KANAŁOWA OK112WNW 9625

## BULKHEAD FIXTURE OK112WNW 9625
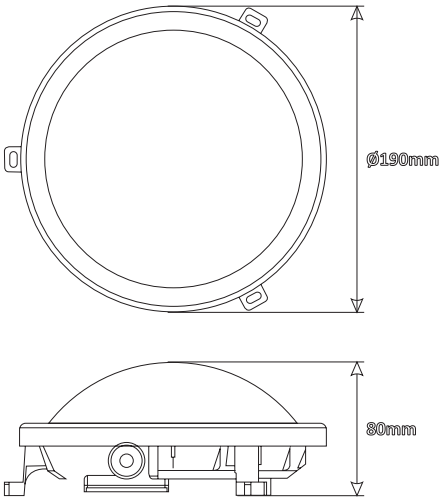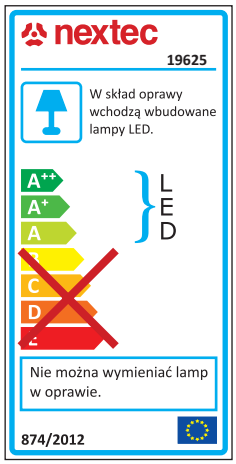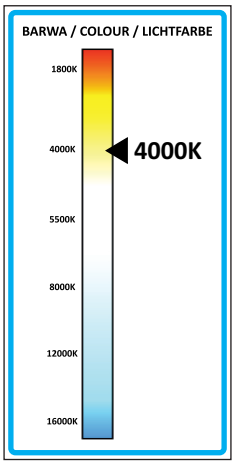
| | |
|---|---|
| | OK112WNW 9625 |
| 908293 | 5908293919625 |
| lm | 840 |
| W | 12W |
| V | 220-240V AC |
| A | 94 mA |
| PF | >0,5 |
| | 4000K |
| CRI | >80 |
| | 100° |
| IP | 54 |
| | 24x5730 |
| | ⌀190x80 |
| | 95%<1s |
| H | 30000 |
| ON / OFF | ⩾30000 |
| +40° -20° | -20/+40 |